REV.	ECNNO.	DESCRIPTION	DRWN	APPD.	DATE.

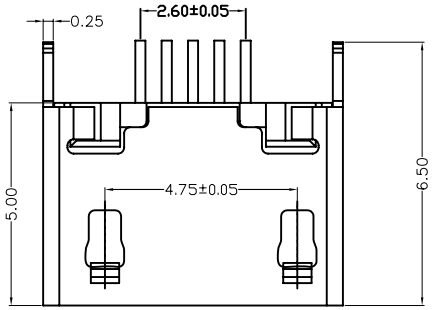

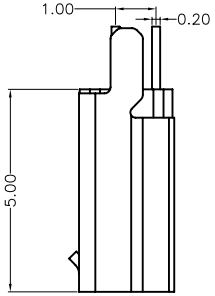

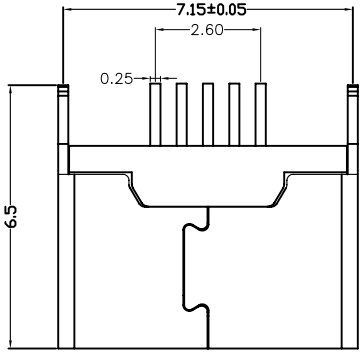

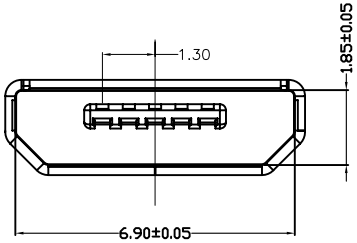

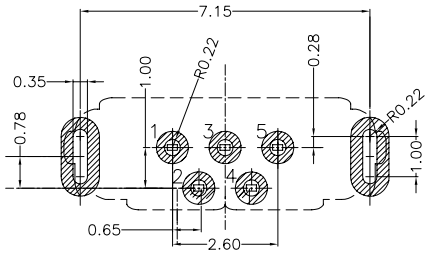

RECOMMEDED P.C.B LAYOUT

Note:

1. Material:
   - 1.1 Housing: High temperature thermoplastic with g.f,UL94v-0
   - 1.2 Contact: copper alloy,t=0.20mm
   - 1.3 Shell: copper alloy,t=0.25mm
2. Specification:
   - 2.1 Current rating: 1 A Max.
   - 2.2 Dielectric withstanding voltage: 100 V(ac) for 1 min.
   - 2.3 Contact resistance: 50 mW Max.
   - 2.4 Insulation resistance: 100 MW Min.
   - 2.5 Total mating force: 3.57 Kgf Max.
   - 2.6 Total unmating force: 1.0 Kgf Min.0.81~2.05 Kgf Min.after 3000 insertion/extration cycles
   - 2.7 Temperature range: -30。C~80。C

UNITS MM	SCALE 1:1	深圳市鑫南天科技有限公司			
GENERAL TOLERANCE X. ±0.30 X.X ±0.20 X.XX ±0.10 X.° ±3° X.X° ±2°		DR. Aaron	TITLE: MICRO 5P/F B TYPE 180插板无卷边成品		
		CHK. Aaron	MAT'L:	DWG NO:	
		APPD. PANYUFENG	DATE: 2013.01.28	P	PARTNO:	SIZE A4